iPhone CPU A8
Bus Frame Diagram 7_BIT_HEX

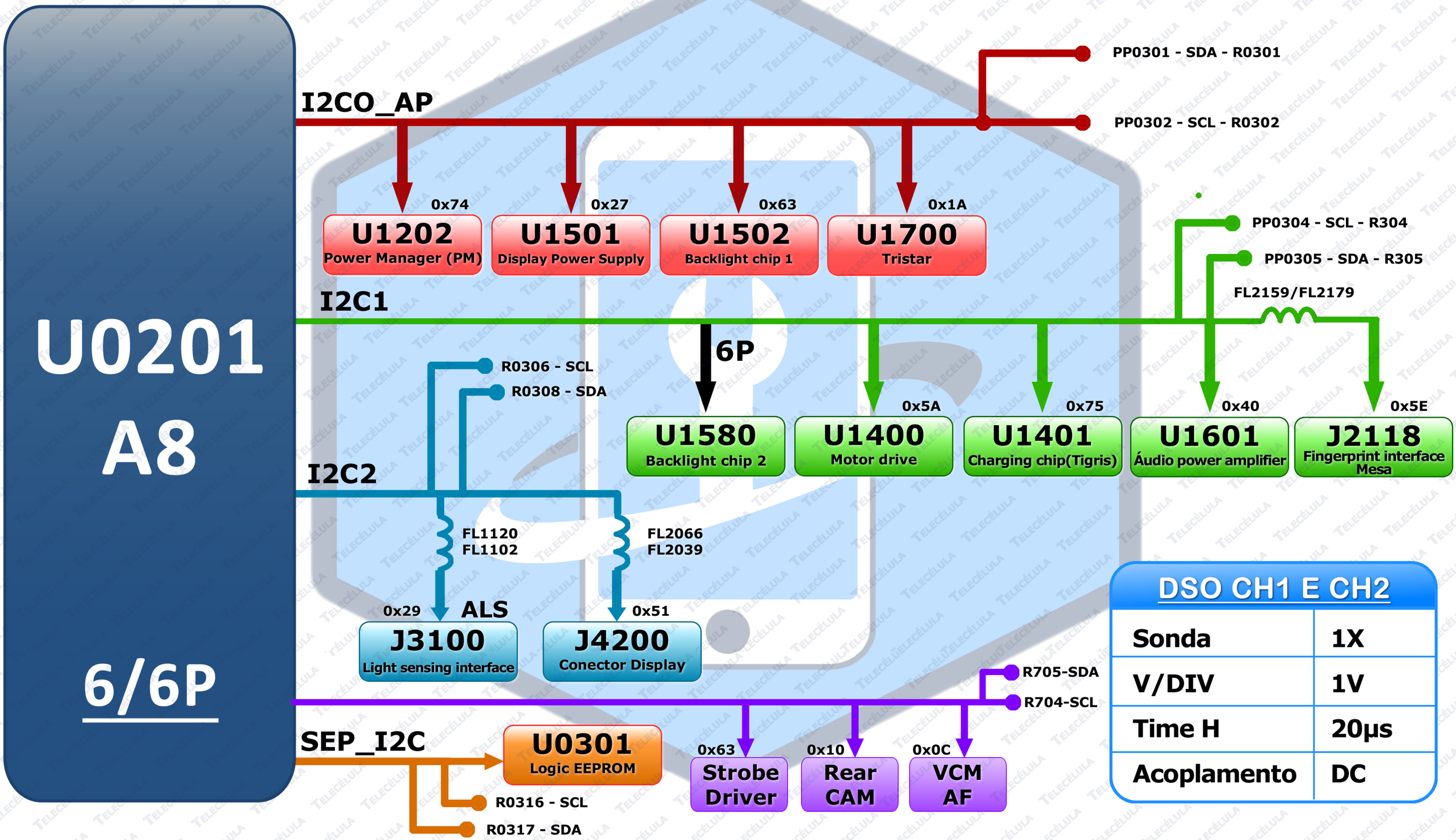

DSO CH1 E CH2	
Sonda	1X
V/DIV	1V
Time H	20µs
Acoplamento	DC